2 in 1 Filing Guide Instruction

HOW TO:

548 01 61-01

1

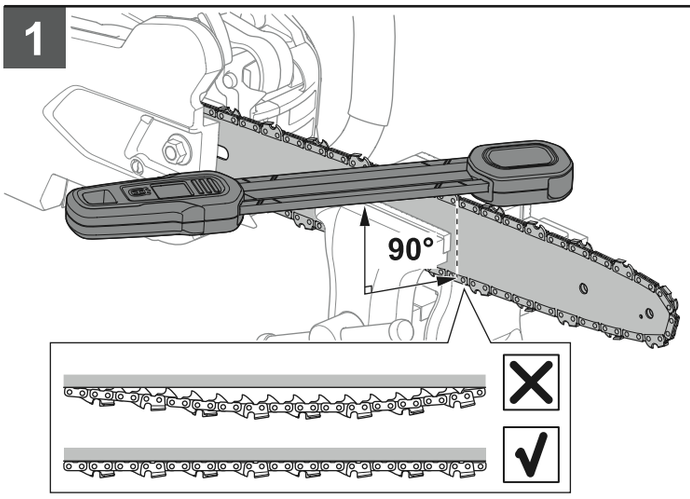

2

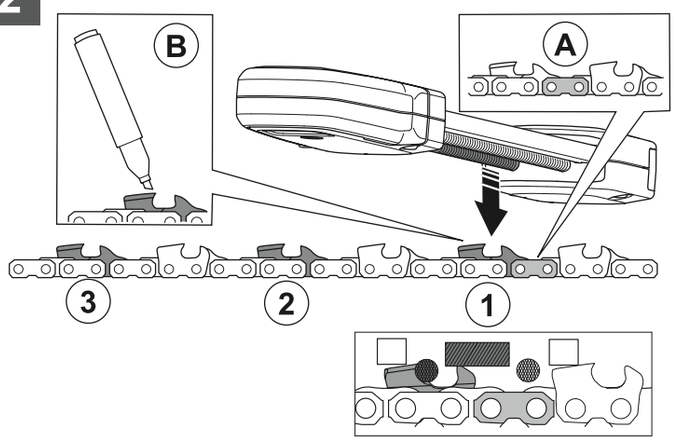

3

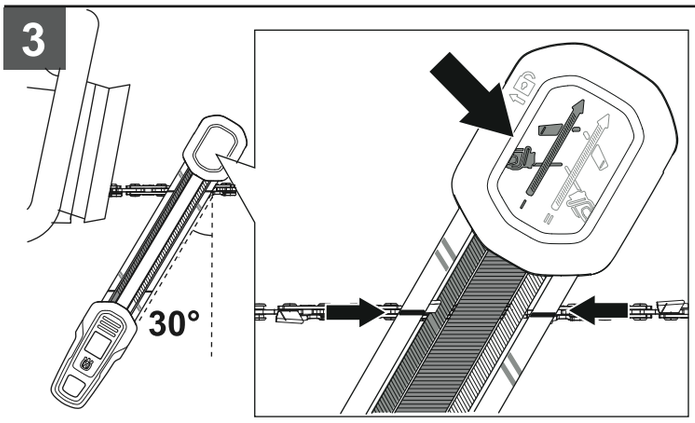

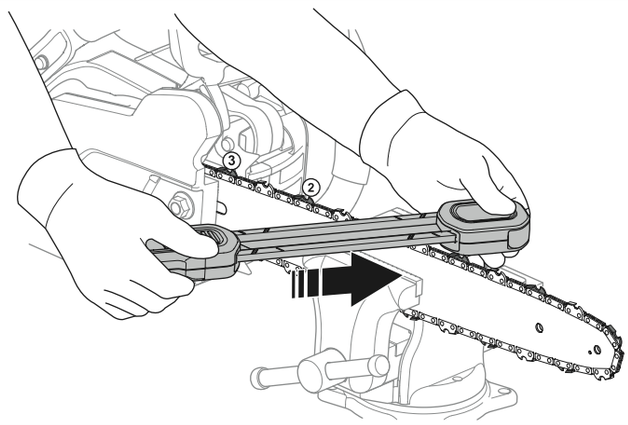

4

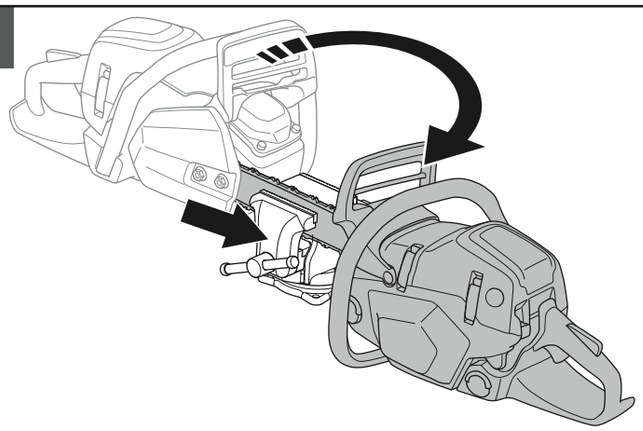

5

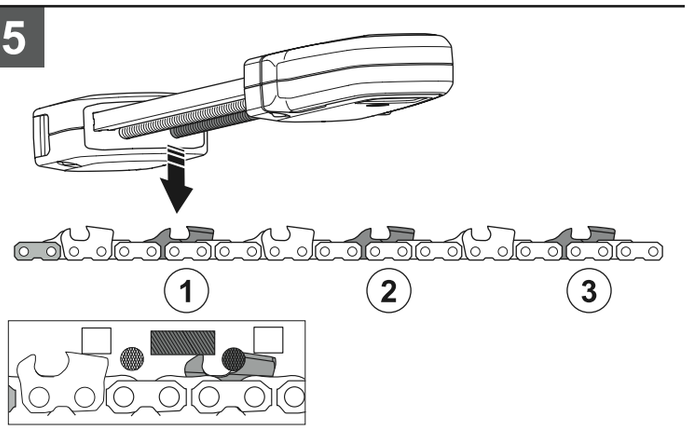

6

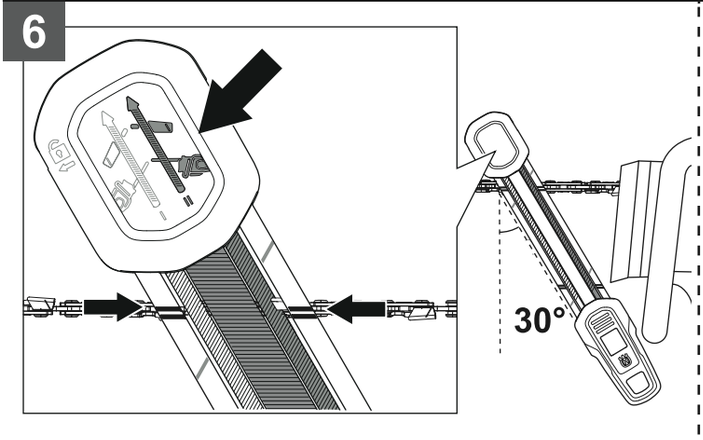

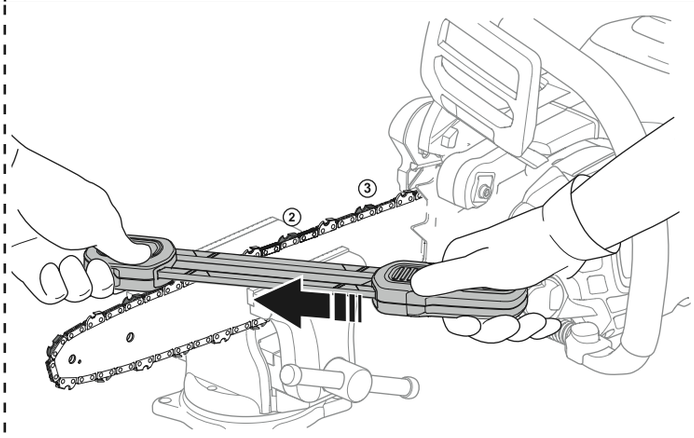

2 in 1 Filing Guide Instruction

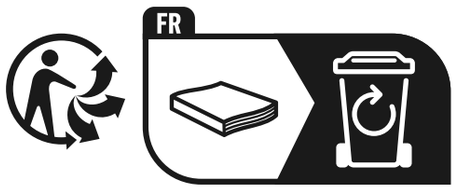



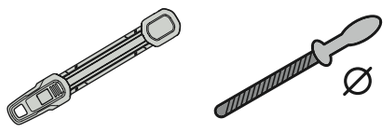

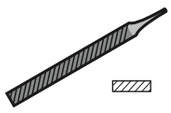

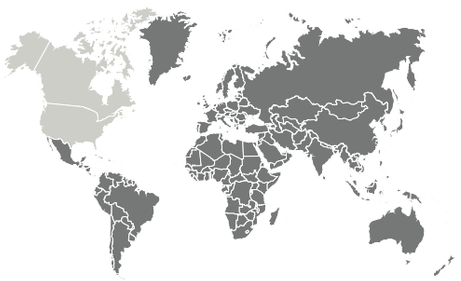

S93G	**93**	**3/8”mini Ø4.0mm Ø5/32”**	**547 40 46-93** 3/8”mini	**597 35 48-01** 4.0mm 5/32”	**548 01 22-03** 3/8”mini
SP21G	**P21**	**.325”mini Ø4.0mm Ø5/32”**	**547 40 46-21** .325”mini		**548 01 22-02** 3/8” - .325”- .325” - .325”mini
S35G, C33, C35	**33 35**	**.325” Ø4.8mm Ø3/16”**	**547 40 46-35** .325”	**597 35 58-01** 4.8mm 3/16”	
SP33G	**P33**	**.325” Ø4.8mm Ø3/16”**	**547 40 46-33** .325”		
S83G, S85, C83, C85	**83 85**	**3/8” Ø5.5mm Ø7/32”**	**547 40 46-85** 3/8”	**597 35 61-01** 5.5mm 7/32”	
SP11G	**P11**	**1/4”mini Ø3.5mm Ø9/64”**	**547 40 46-11** 1/4”mini	**597 35 48-03** 3.5mm 9/64”	**548 01 22-01** 1/4”mini

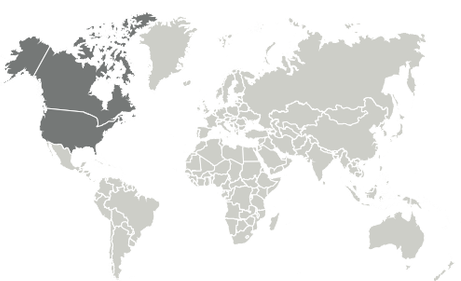

S93G	**93**	**3/8”mini Ø4.0mm Ø5/32”**	**547 40 45-93** 3/8”mini	**588 24 59-01** 4.0mm 5/32”	**548 01 22-06** 3/8”mini
SP21G	**P21**	**.325”mini Ø4.0mm Ø5/32”**	**547 40 45-21** .325”mini		**548 01 22-05** 3/8” - .325”- .325” - .325”mini
S35G, C33, C35	**33 35**	**.325” Ø4.8mm Ø3/16”**	**547 40 45-35** .325”	**588 24 61-01** 4.8mm 3/16”	
SP33G	**P33**	**.325” Ø4.8mm Ø3/16”**	**547 40 45-33** .325”		
S83G, C83, C85	**83 85**	**3/8” Ø5.5mm Ø7/32”**	**547 40 45-85** 3/8”	**588 24 62-01** 5.5mm 7/32”	

www.husqvarna.com
Husqvarna AB,
SE-56182 Huskvarna. Sweden.